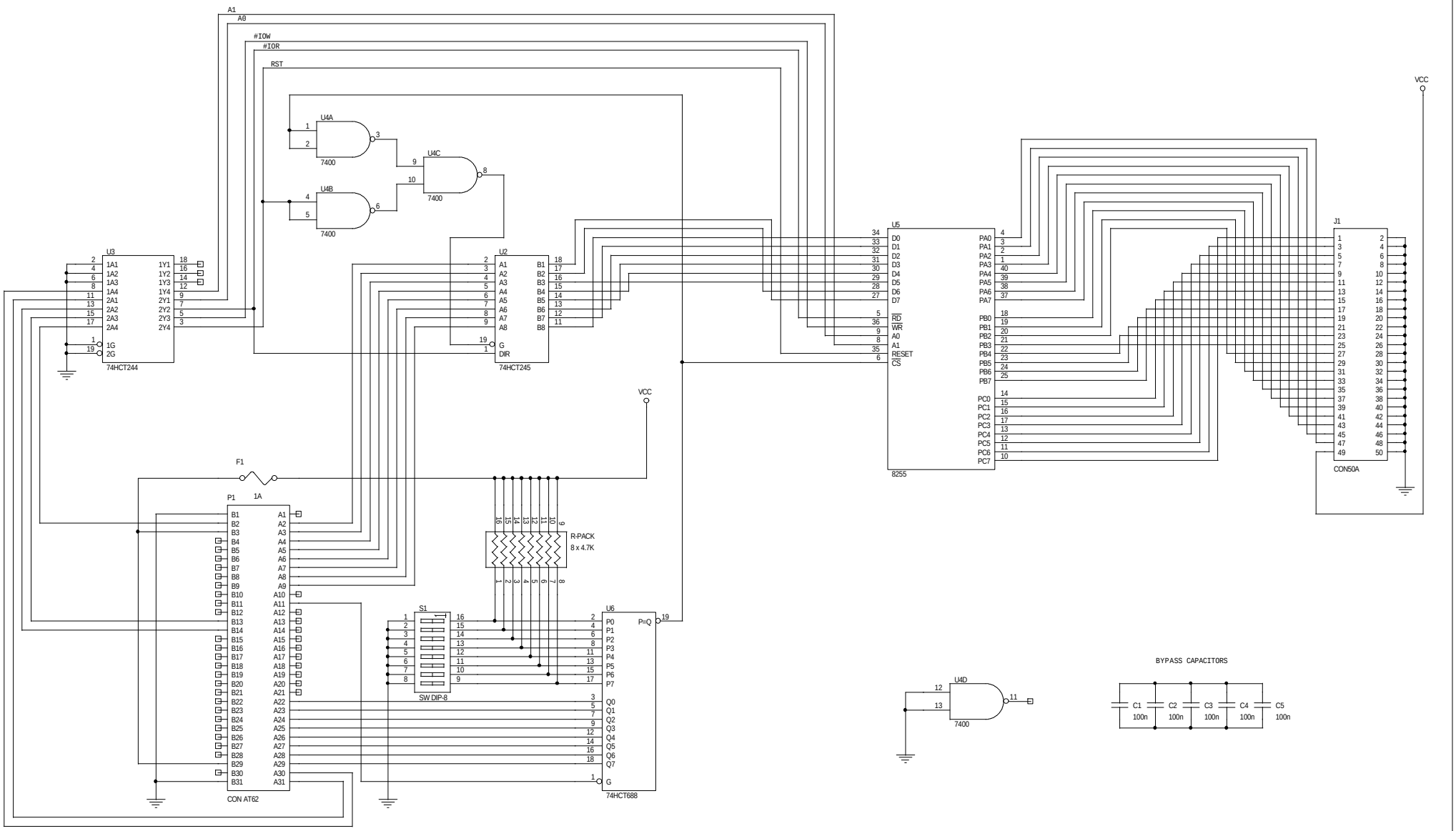

Fabio Riscica (e-mail f.riscica@flashnet.it)

Title	CARD DIGITAL 24 I/O	
Size A3	Document Number 1.0	Rev 1.0
Date: Sunday, January 11, 1998	Sheet 1 of 1	