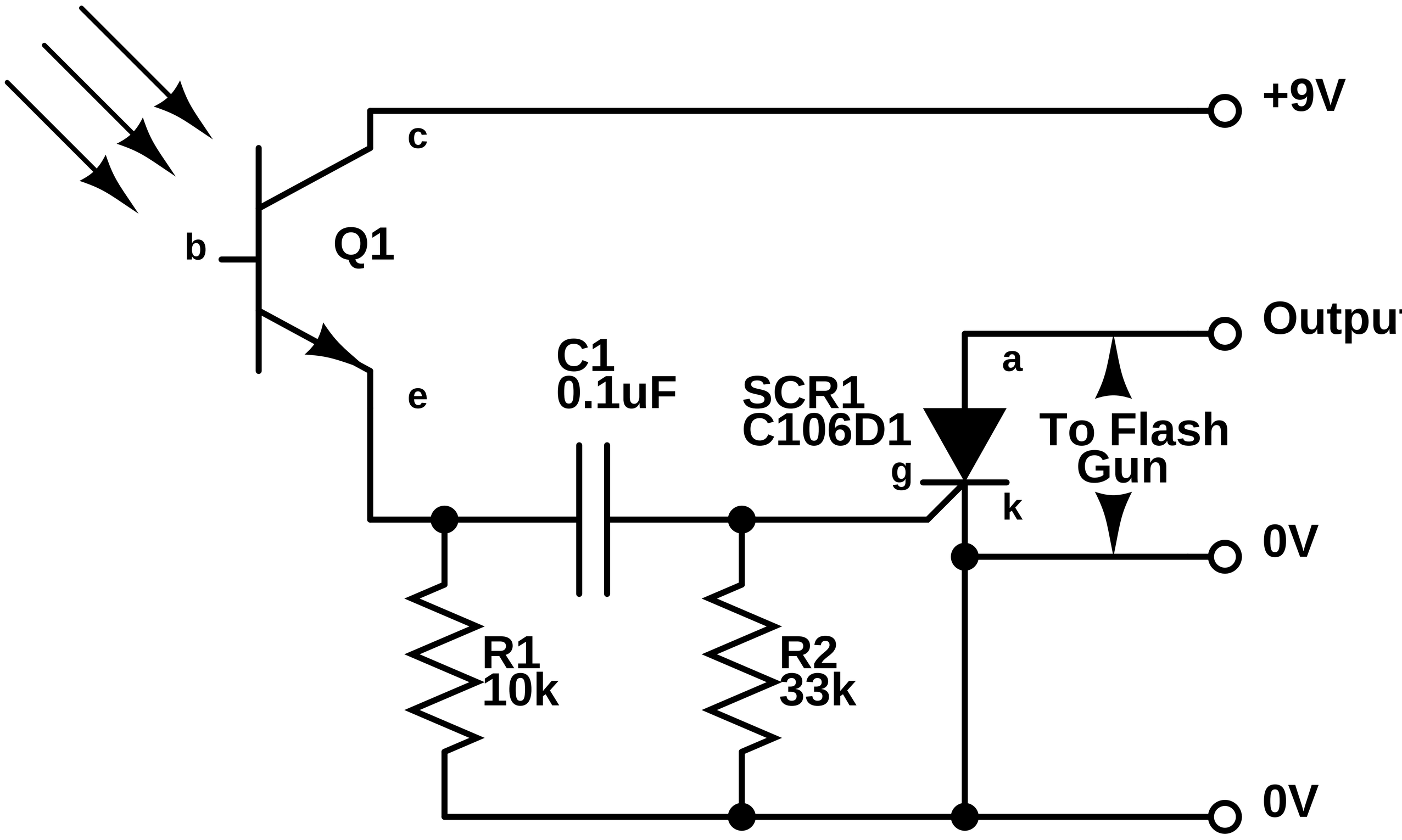
+9V
c
b
Q1
e
C1
0.1uF
SCR1
C106D1
a
Output
To Flash
Gun
g
k
0V
R1
10k
R2
33k
0V